Art.-Nr. 565751

Downlight Acrux Pro 145, 20 W, DIM, 2700/3000/4000 K, white

DEKOLIGHT

CCT | IK05 | IP54 | power switch | Ra>90 | UGR<19

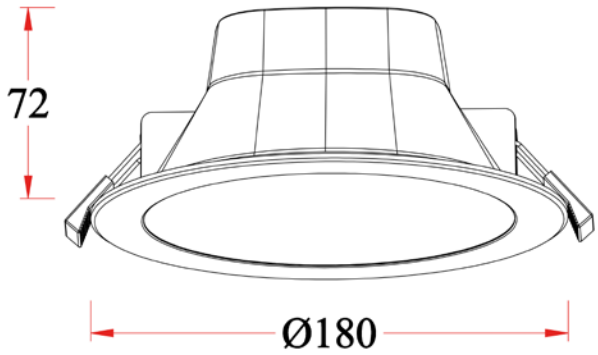

Special features

- through-wiring possible
- Integrated power supply unit for 230V direct connection
- plash-proof [downwards when installed]
- light colour adjustable in three stages
- power adjustable in 3 stages (only Ø 120 / 145 / 190)
- BEG eligible

Housing Material	Aluminium, PA - Polyamide
Housing Color	White
Surface structure	Shiny
Material of Lens	PMMA
Colour of Lens	White
Protection Class	Protection class II/protective insulation
Power Selectable	12 W, 16 W, 20 W
Rated Input Voltage Frequency	220-240 V/AC 50 / 60 Hz
Dimmable	Yes
Control	Trailing-edge dimmer, Leading-edge dimmer
Motion Detector	No
Light Source	LED, Light source not changeable
Color Temperature	2700/3000/4000 K
Colour Consistency	6 SDCM
Colour consistency light source	6 SDCM
CRI (Ra)	90
Rated Luminous Flux	2400/2600/2500 lm
Rated Angle of Reflection	100 Degree
UGR	19
Light Exit Surfaces	1 PCS
Light characteristics	Direct
Light direction	Below
Height	72 mm
Diameter	180 mm
Installation Depth	72 mm
Required Installation Depth	102 mm
Cut Out Diameter	145-155 mm
Product weight	280 g

Working Temperature	-20 to 45 °C
Storage Temperature	-20 to 60 °C
IP Protection Class	IP 20, IP 54
IK Protection Class	IK05
Life Time L70 / B50	50000 h
Life Time L80 / B10	30000 h
Life Time L80 / B50	40000 h
Switching Cycles	50000 PCS
Energy Efficiency Class Lightsource	This product contains a light source of energy efficiency class C.

IP20 | IP54